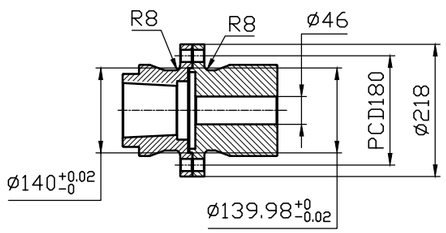

OUTPUT SHAFT COUPLING & PROPELLER COUPLING DIMENSION

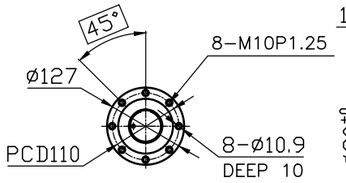

INPUT COUPLING DIMENSION

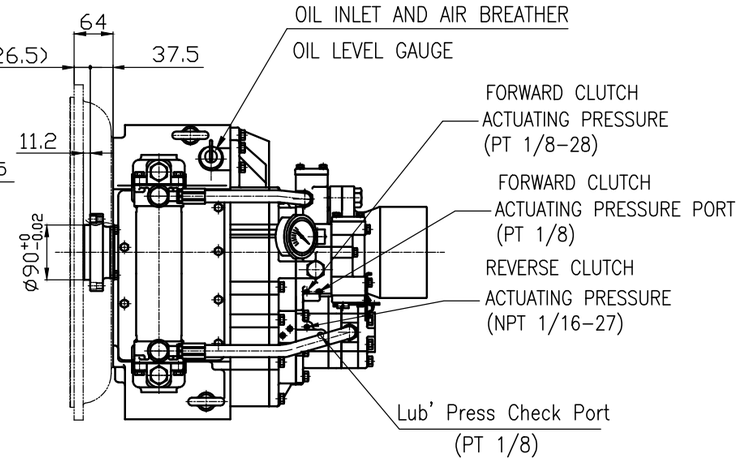

DMT 150H MARINE TRANSMISSION SPECIFICATION			
GEAR RATIO	1.83, 2.09 , 2.51 , 3.08 , 3.43		
TOTAL WEIGHT	APPROX. 287 kg(DRY)		
OIL CAPACITY	APPROX. 5.5 L		
OIL VISCOSITY	SAE # 30		
OIL PRESSURE	1.96 ~ 2.35 MPa	CLUTCH OIL	
DIRECTION OF ROTATION IN FORWARD	INPUT	C.C.W VIEWED FROM THE STERN	
	OUTPUT	C.W VIEWED FROM THE STERN	
OIL CHANGE INTERVAL	THE FIRST 100HOURS OF INITIAL OPERATION		
	AND EVERY 1000HOURS THEREAFTER		
SHIFTING LIMIT	UNDER 50% OF THE RATED ENGINE SPEED		
OIL COOLER	WATER FLOW 40 ~ 60L/min		
	TEMPERATURE OF COOLING WATER	MAX 32°C	
OPERATING TORQUE OF SHIFTING LEVER	UNDER 2.94Nm		

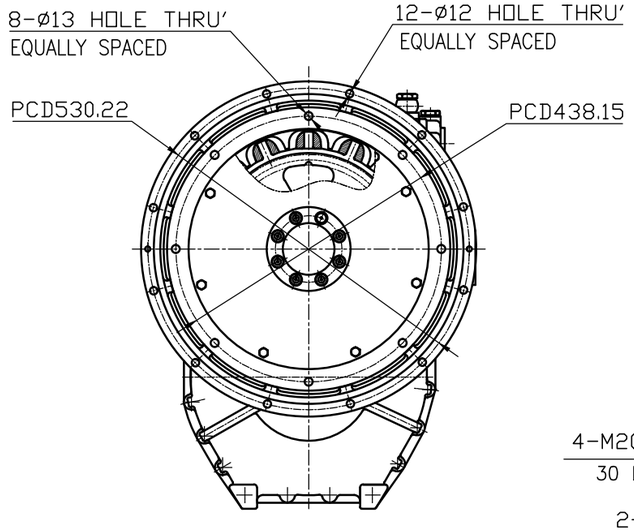

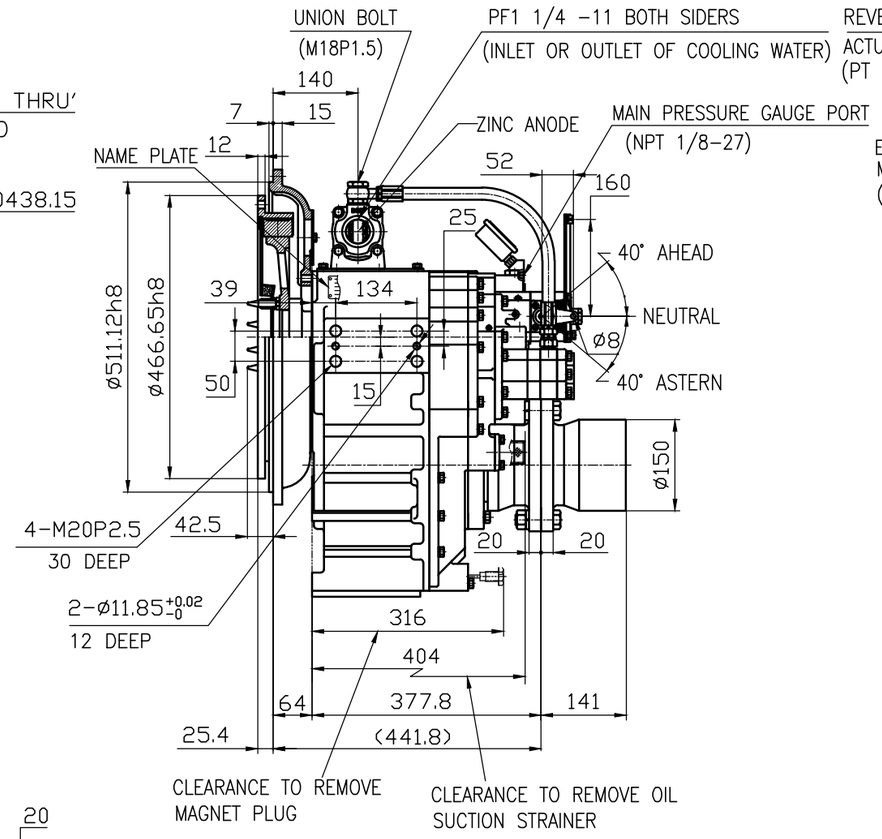

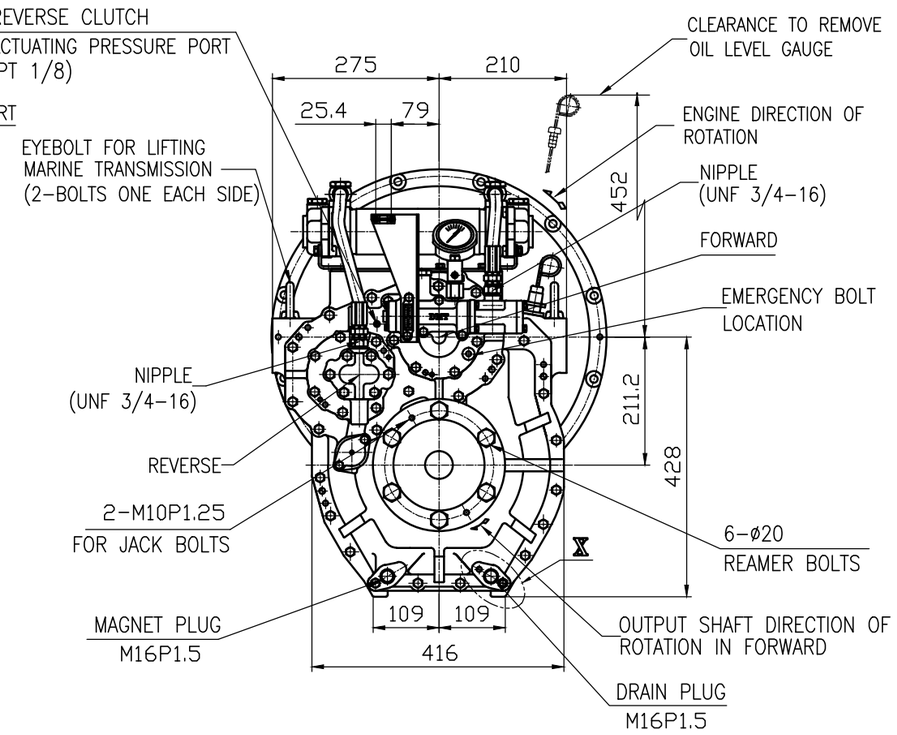

REMARK
1.HOUSING: SAE#1
2.DRIVING RING: SAE 14"
3.COULING TYPE : DUAL STAGE

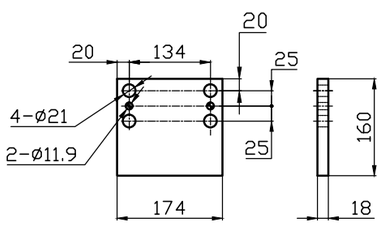

BRACKET DIMENSION

"X" detail(3/1)

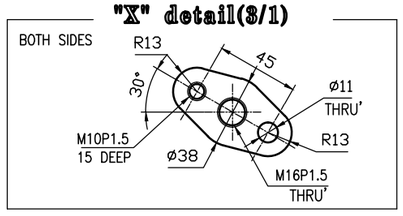

공통공차 TOLERANCE ON			
분수 FRACTIONS ± —	소수 DECIMALS ± —	각도 ANGLES ± —	
절삭가공 일반공차			
구분	조급	중급	정급
1 초과 4 이하	± 0.3	± 0.1	± 0.05
4 16	± 0.5	± 0.2	± 0.07
16 63	± 0.7	± 0.3	± 0.1
63 250	± 1.2	± 0.5	± 0.2
250 1000	± 2.0	± 0.8	± 0.3

번호 NO.	품번 PART NO.	품명 PART NAME	개수 Q'TY	재질 MATERIAL	규격 SIZE	비고 REMARKS
재질 MATERIAL	—		형식 TYPE	DMT150H		원도번 ORIGINAL DWG. NO.
	작성 DATE 2012.06.18	척도 SCALE N/S	품명 NAME	MARINE TRANSMISSION		
승인 APPROVED BY	검도 CHECKED BY	제도 DRAWN / 설계 DESIGNED				
JK.Kim	KS.Han	KC.Yoon	도번 DWG. NO.	15000GA~E-114DC		개정(REV.) 000
D-I INDUSTRIAL			크기 SIZE	A3	코드번호 CODE ID. NO.	